SAFETY, HEALTH AND ENVIRONMENTAL INFORMATION

ALL WORK TO BE CARRIED OUT IN ACCORDANCE WITH CURRENT CDM REGULATIONS 2015 AND HSG150. IN ADDITION TO THE HAZARDS/RISKS NORMALLY ASSOCIATED WITH THE TYPES OF WORK DETAILED ON THIS DRAWING, PLEASE NOTE THE FOLLOWING:

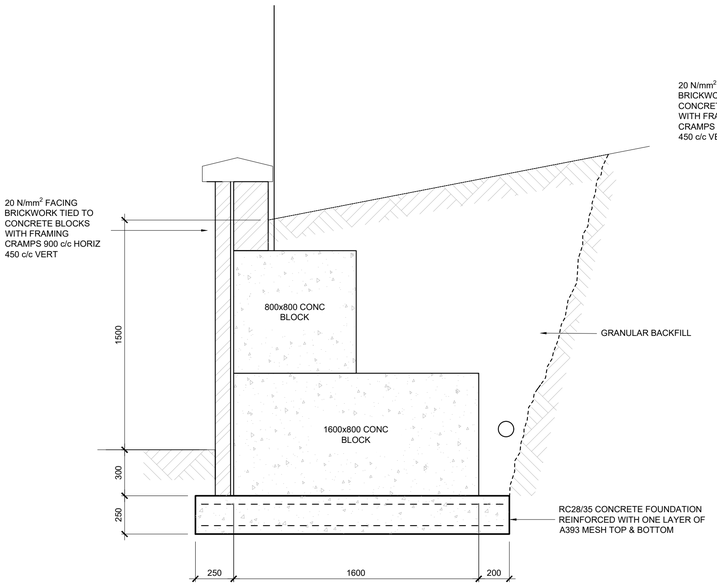

TYPE A - MAX RETAINED HEIGHT = 1500mm

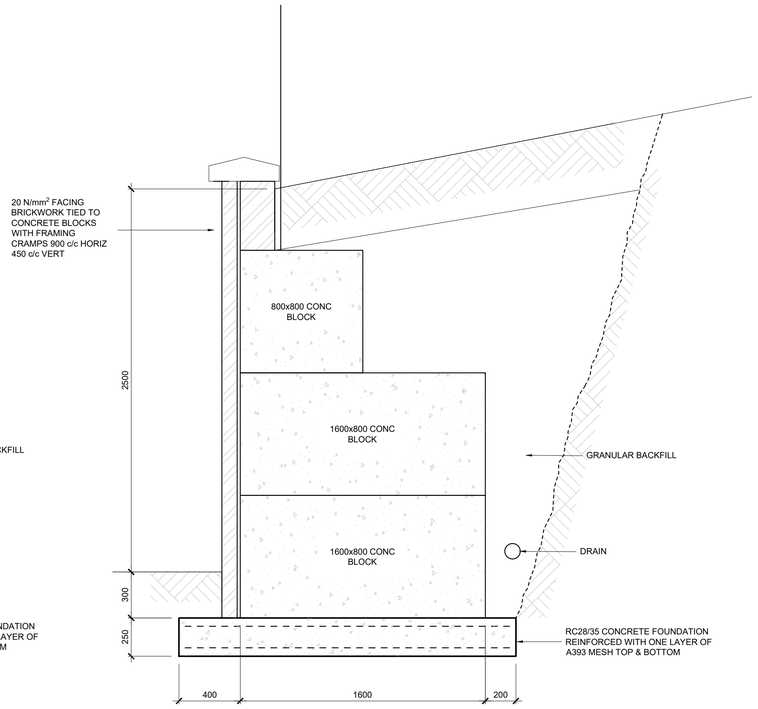

TYPE B - MAX RETAINED HEIGHT = 2500mm

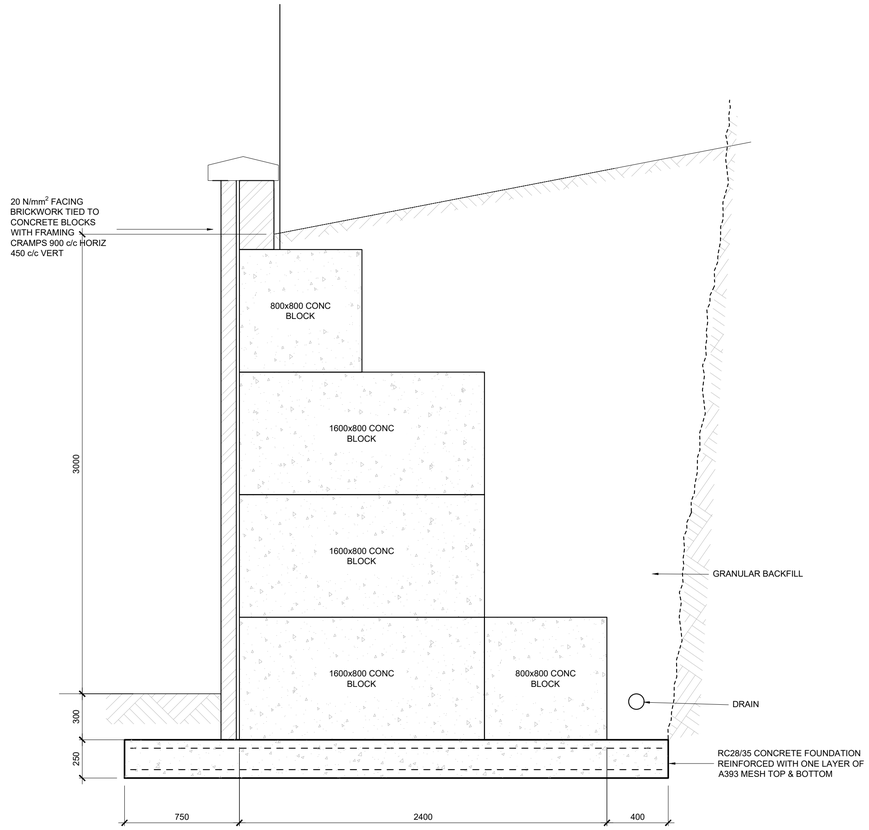

TYPE C - MAX RETAINED HEIGHT = 300mm

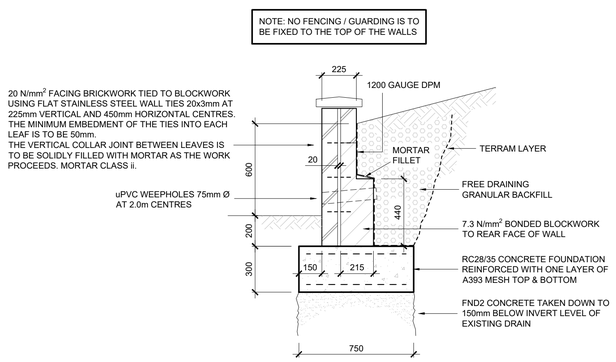

TYPE 1 - MAX RETAINED HEIGHT = 600mm

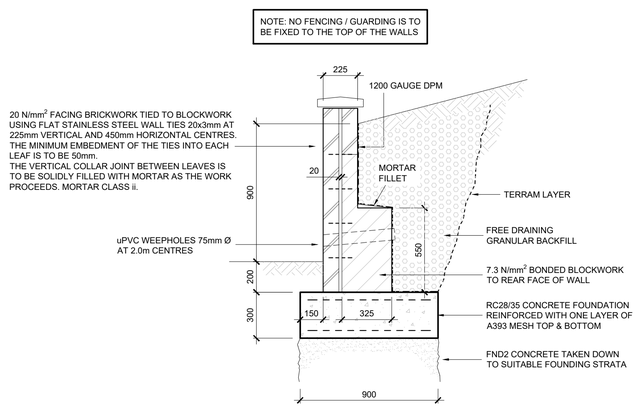

TYPE 2 - MAX RETAINED HEIGHT = 900mm

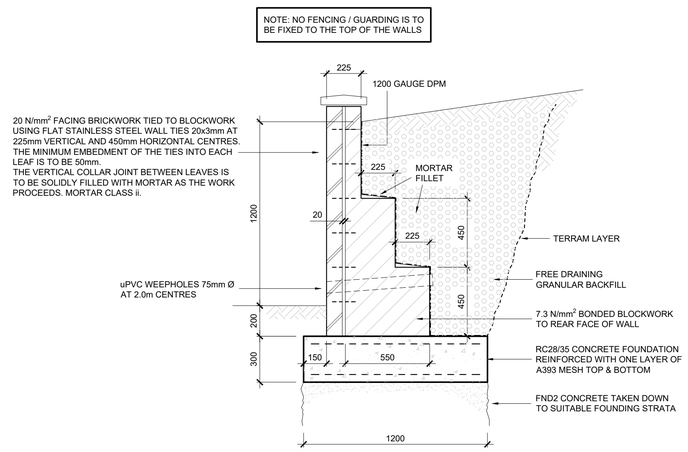

TYPE 3 - MAX RETAINED HEIGHT = 1200mm

REV	DESCRIPTION	BY	DATE
-	-	-	-

status: PRELIMINARY

CDGray CIVIL & STRUCTURAL ENGINEERS
5-6 Deryn Court, Wharfedale Road, Pentwyn, Cardiff, CF23 7HB
Tel: 02920 733181
Web: www.cdgray.co.uk

client: ENZO HOMES

project: HEOL Y GLYN GLYNNEATH

drawing title: RETAINING WALL SECTIONS

drawn	chkd	project no.
SB	KE	9610

date drawn	drg no.	rev.
18.12.2020	002	-

scale @A1: 1:20

F:\Jobs\9600-9699\9610 - Heol Y Glyn, Glynneath\05-Documents\02-Drawings\structures\CDGA-9610-001 retaining wall plan